2015.11.26

Electric Circuit for Physicists
電子回路論 第7回

東京大学理学部・理学系研究科
物性研究所
勝本信吾
Shingo Katsumoto

Exercise 3-3

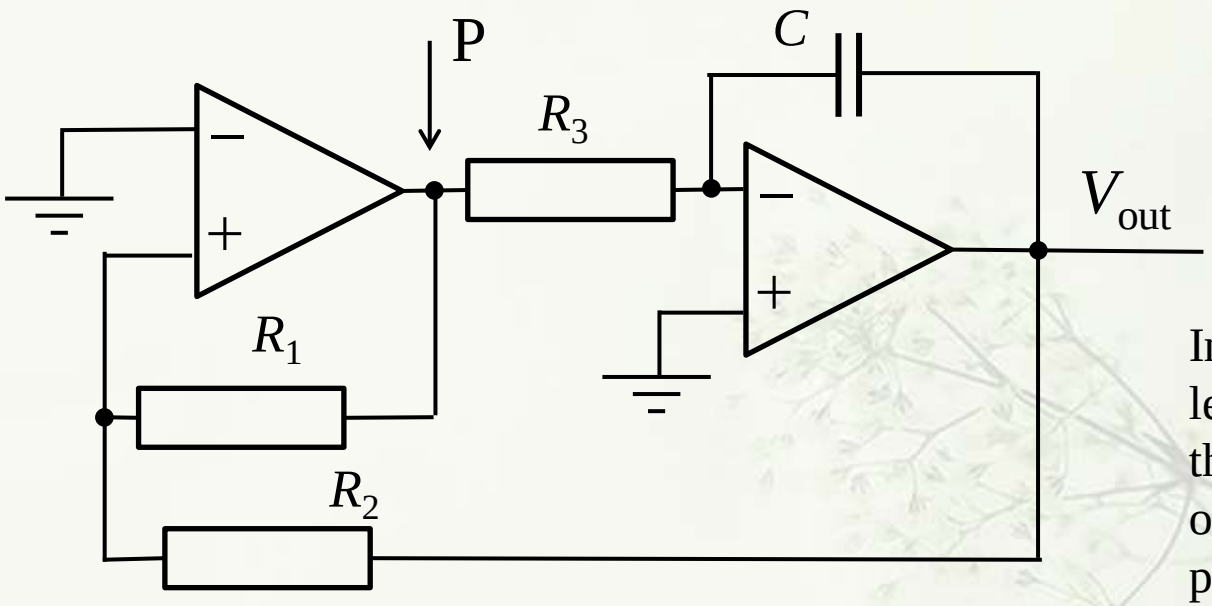

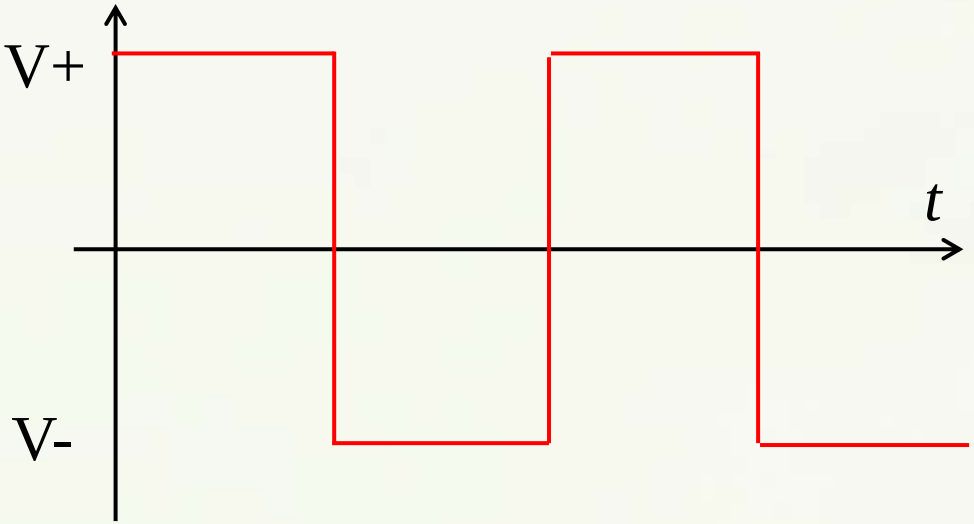

In the circuit shown in the left, at point P, a waveform in the lower panel was observed. Here V+ and V- are power source voltages for + and – respectively.

Draw a rough sketch of the waveform for V_{out}.

Review

Feedback

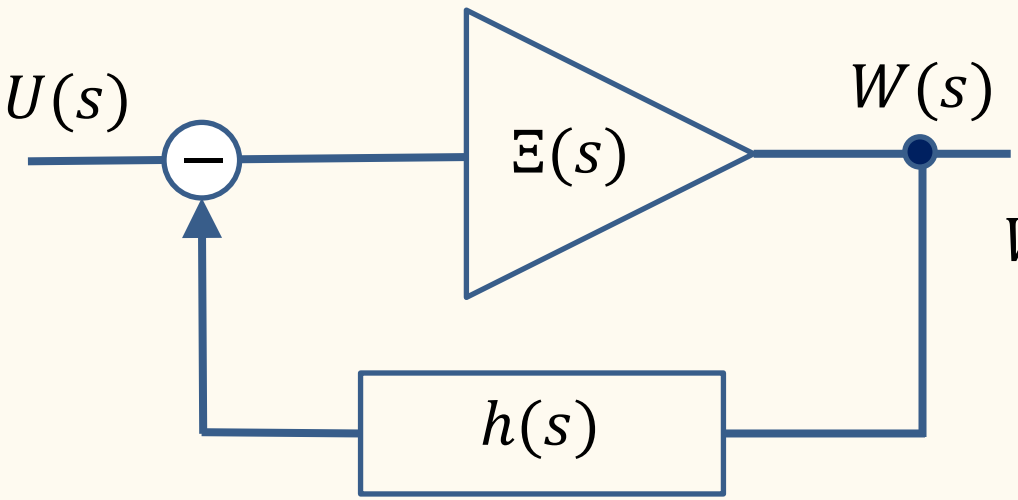

$$W(s) = \Xi(s)U(s)$$

$$W(s) = \Xi(s)[U(s) - h(s)W(s)]$$

$$W(s) = \frac{\Xi(s)}{1 + \Xi(s)h(s)} U(s)$$

$$\stackrel{\text{def}}{=} G(s)U(s)$$

$|1 + \Xi(s)h(s)| > 1$: Negative feedback, < 1: Positive feedback

$$|\Xi(s)| \gg 1 \;\rightarrow\; G(s) \approx \frac{1}{h(s)}$$

Condition for negative feedback

$|1 + \Xi(s)h(s)| > 1$: Negative feedback, < 1: Positive feedback

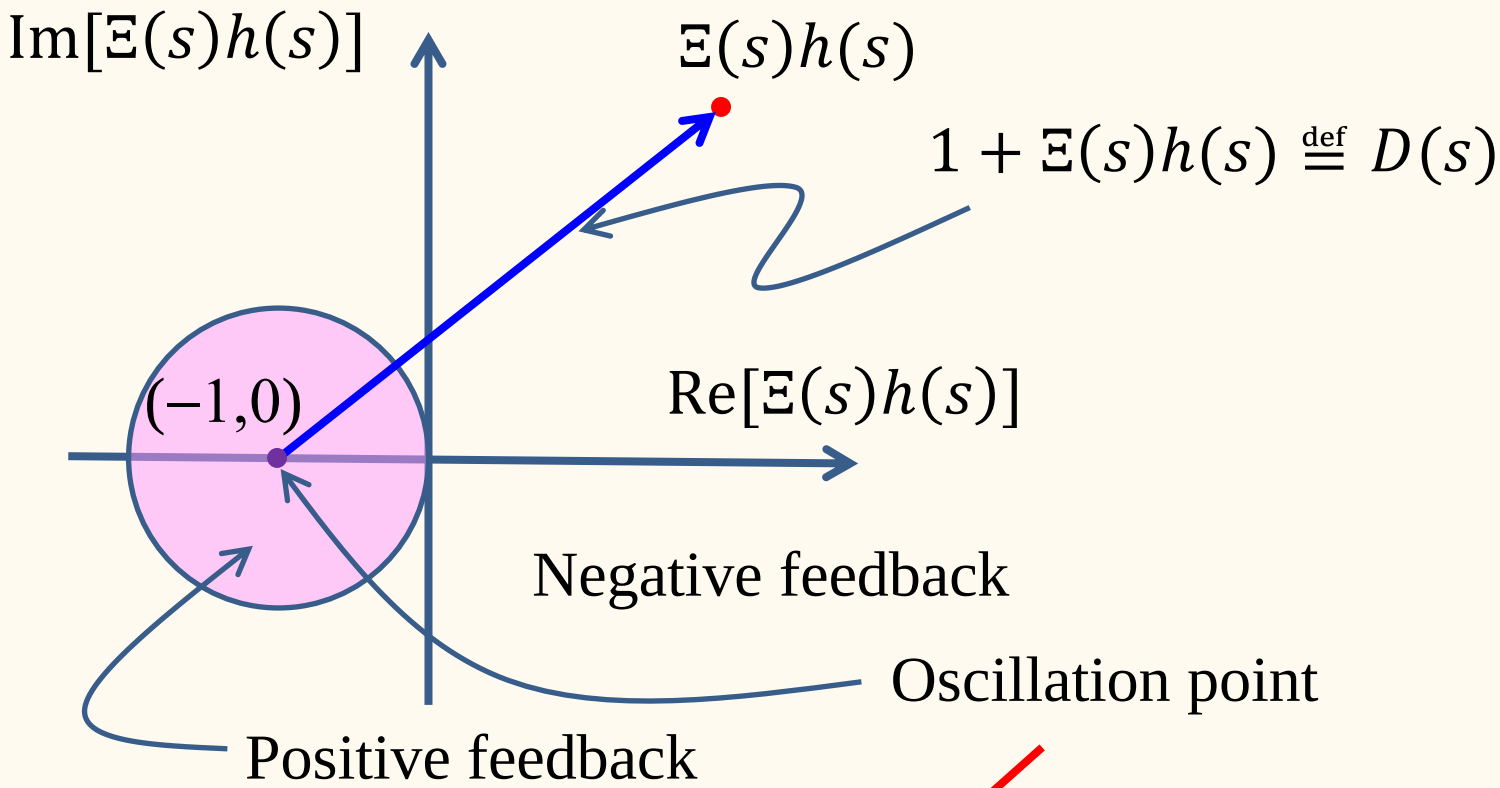

If $\Xi(s)h(s) = -1$ has solutions, the circuit may be unstable.

How can we judge? $\longrightarrow$ Criteria (Routh-Hurwitz, Nyqust, Liapunov, …)

Zeros and poles of $D(s)$

Assumption 1: $\Xi(s), \Xi(s)h(s)$ are stable

$\rightarrow$ Poles are on the left half plane of s.

Assumption 2: $\Xi(i\omega), \Xi(i\omega)h(i\omega) \rightarrow 0$ for $|\omega| \rightarrow \infty$

$\Xi(s) = \frac{Q(s)}{P(s)}$, $h(s) = \frac{q(s)}{p(s)}$: $P(s), Q(s), p(s), q(s)$ polynomials

$\deg(P) > \deg(Q), \deg(p) \geq \deg(q)$

$$D(s) = 1 + \Xi(s)h(s) = \frac{P(s)p(s)}{P(s)p(s) + Q(s)q(s)}$$

$$D(s) = D_0 \frac{(s-\beta_1)\cdots(s-\beta_n)}{(s-\alpha_1)\cdots(s-\alpha_n)}$$

The same order

Zeros and poles of $D(s)$

$$D(s) = D_0 \frac{(s-\beta_1)\cdots(s-\beta_n)}{(s-\alpha_1)\cdots(s-\alpha_n)}$$

$\{\beta_i\}$: $\boxed{\text{Zeros of } D(s)} \rightarrow \boxed{\text{Poles of } G(s)}$

$\exists \beta_i \in$ right half plane of s $\rightarrow$ The circuit is unstable.

$$\arg(D) = \sum_{i=1}^{n} \arg(s-\beta_i) - \sum_{i=1}^{n} \arg(s-\alpha_i)$$

Left half plane

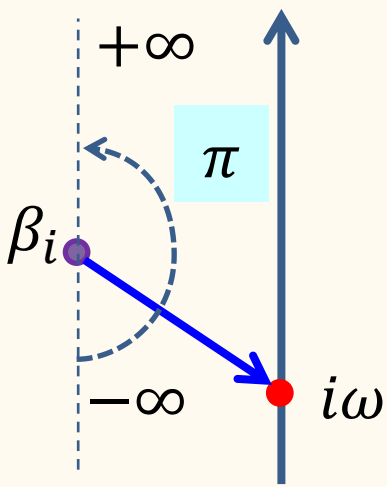

Right half plane

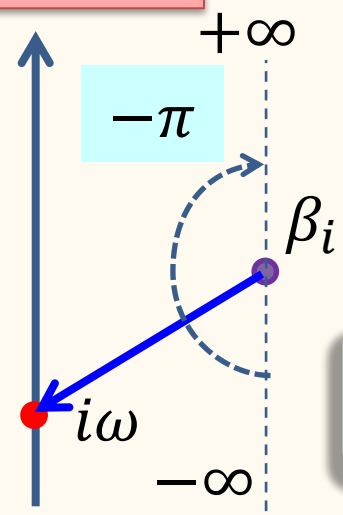

$s = i\omega$ (on imaginary axis)

$\omega: -\infty \rightarrow +\infty$

Number of zeros on the right half plane: m

$$\Delta \arg(D) = (n-m)\pi - m\pi$$
$$-n\pi = \boxed{-2m\pi}$$

Nyquist Plot and Criterion

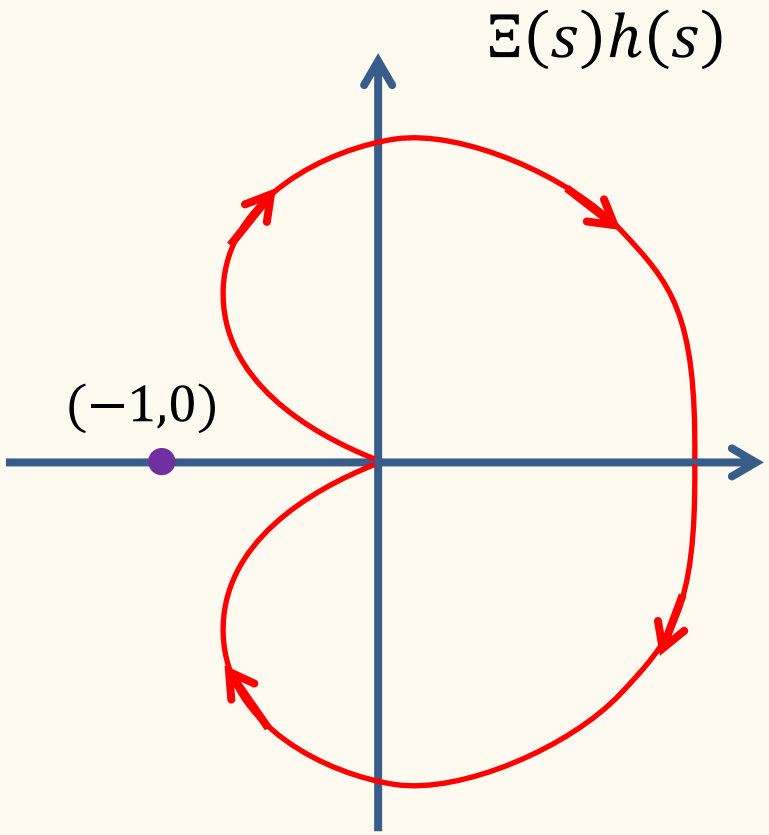

$\Delta \arg(D) = 0$

Stable

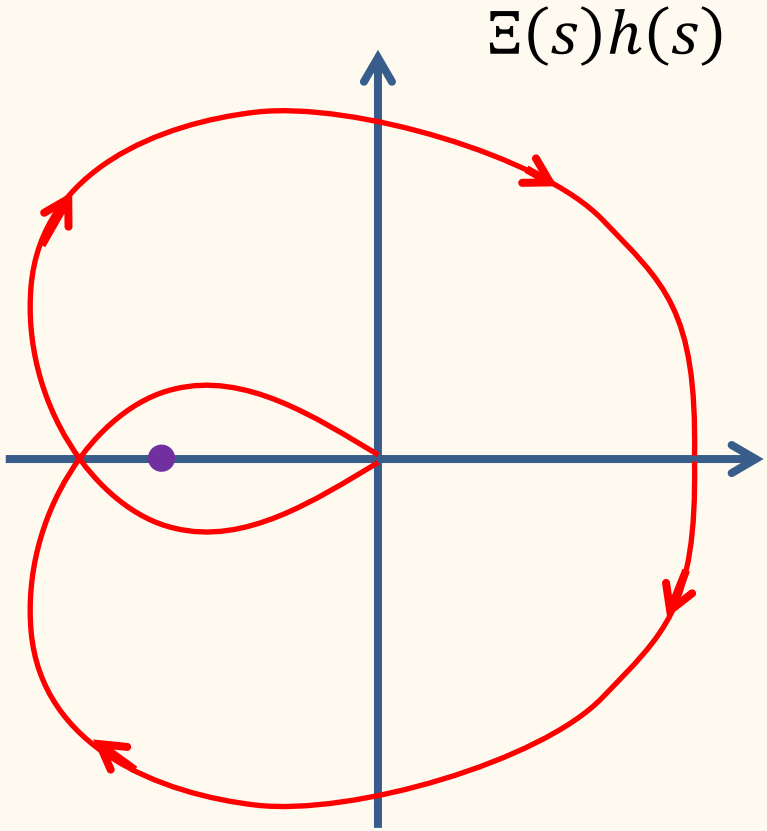

$\Delta \arg(D) = -4\pi$

Unstable

Harry Nyquist
(1889–1976)

Frequency Dependent Characteristics of OP-Amps

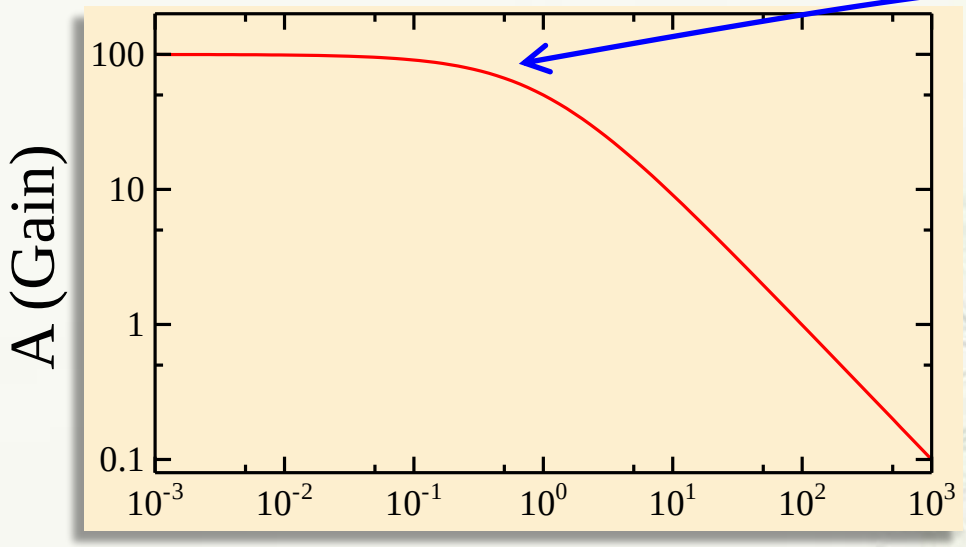

$\omega = 2\pi f$

Cut-off frequency

$\omega_T = 2\pi f_T$

Phase rotates by $\pi/2$

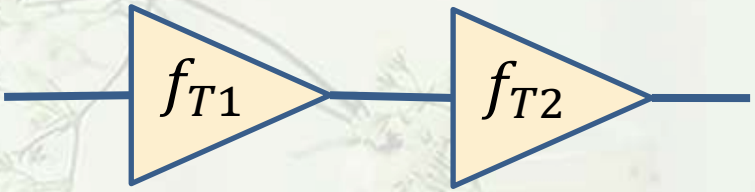

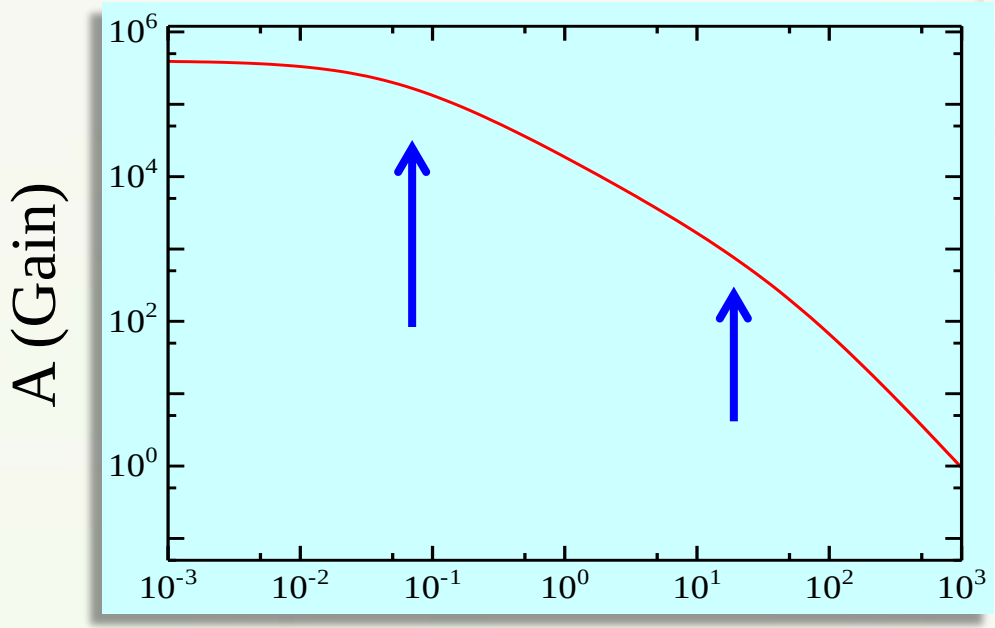

Multiple cut-off frequency:
Phase rotates more than π

If gain is larger than 1 at phase shift π :

Dangerous!

Phase compensation

Why dangerous?

π phase shift: negative feedback → positive feedback

In Nyquist plot

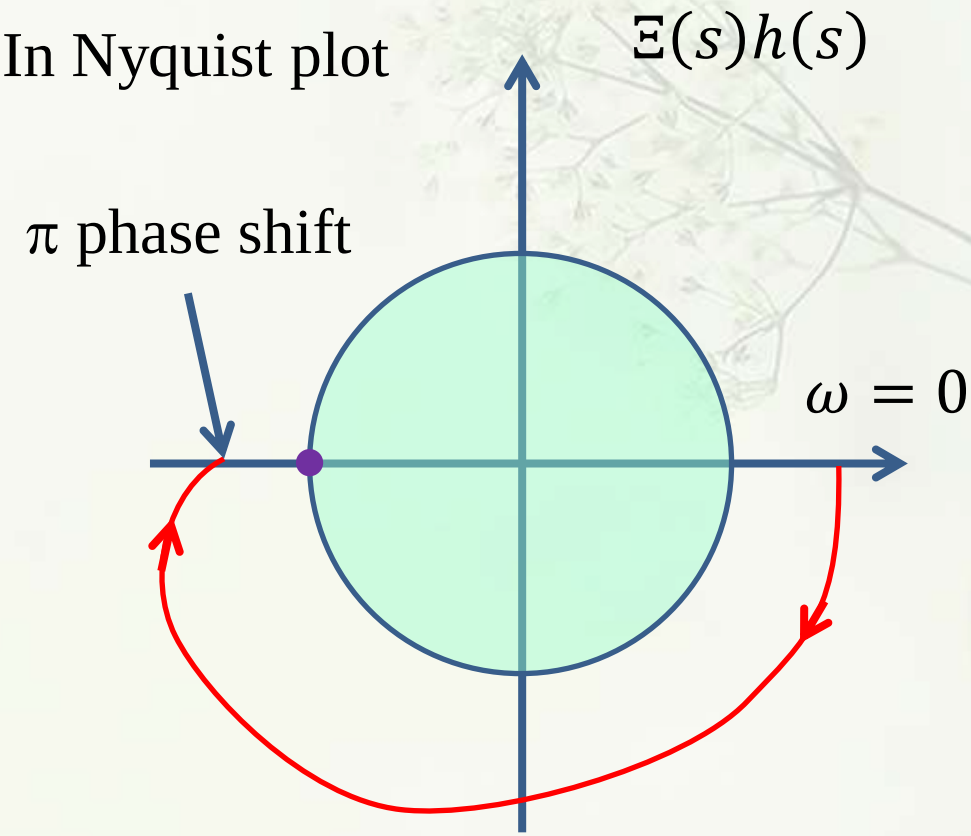

Phase compensation

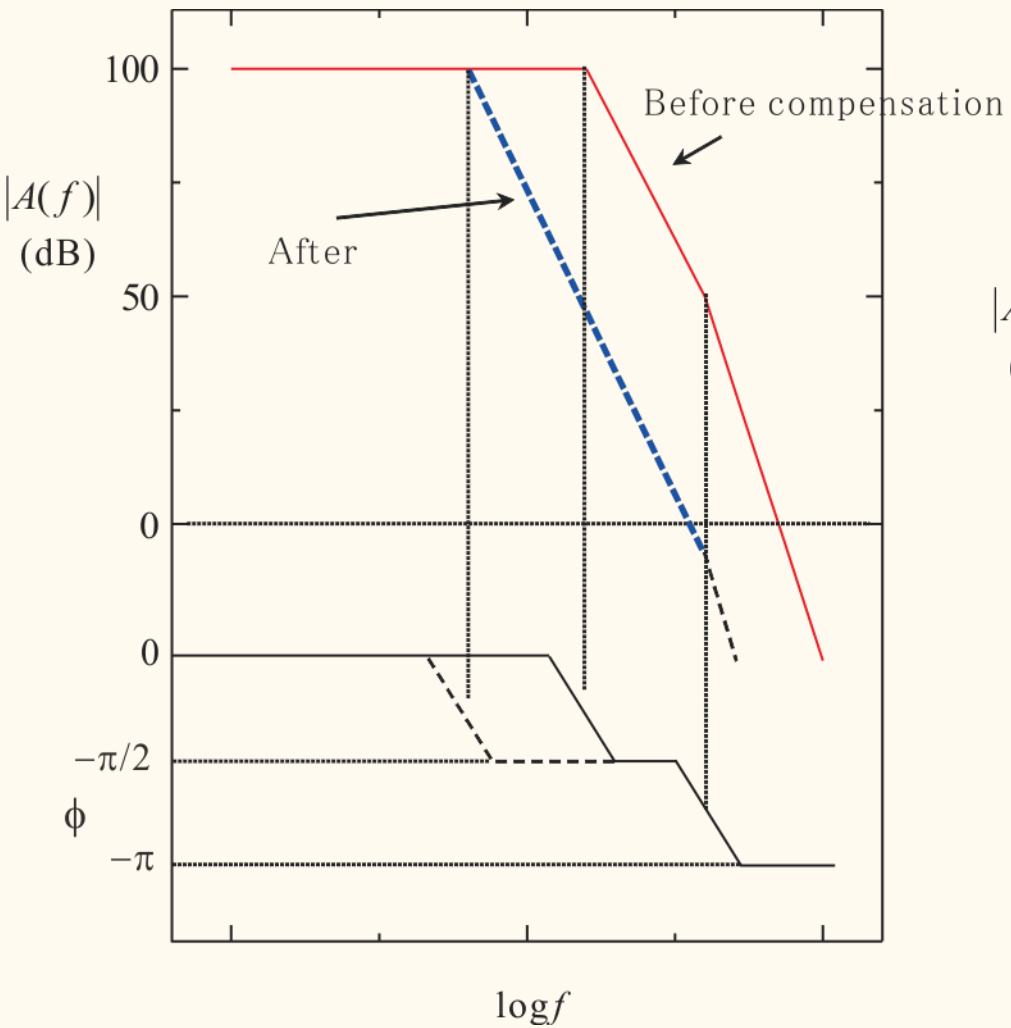

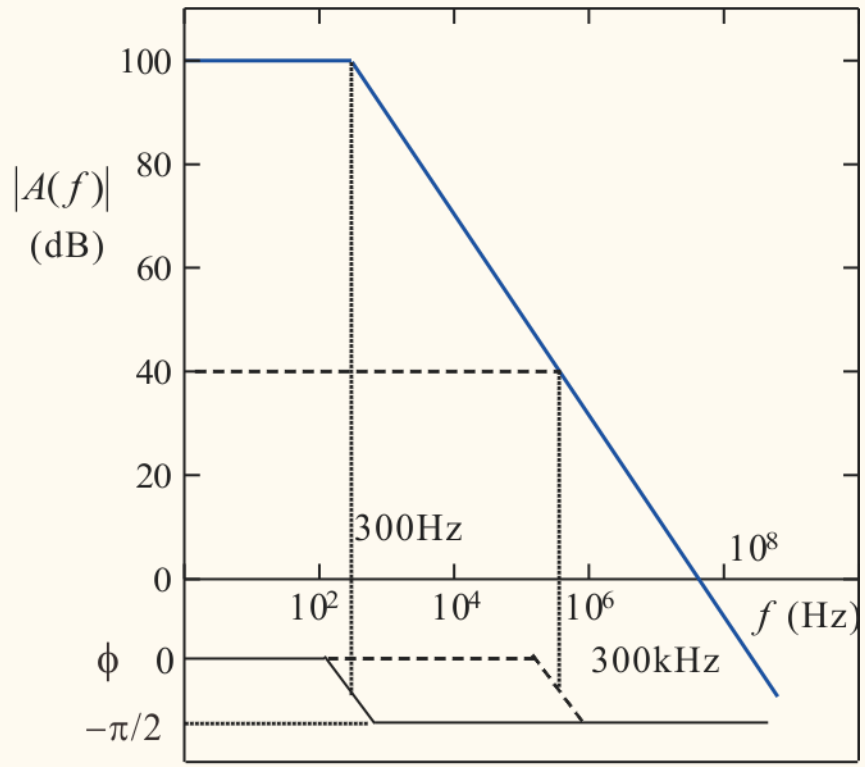

Phase compensation

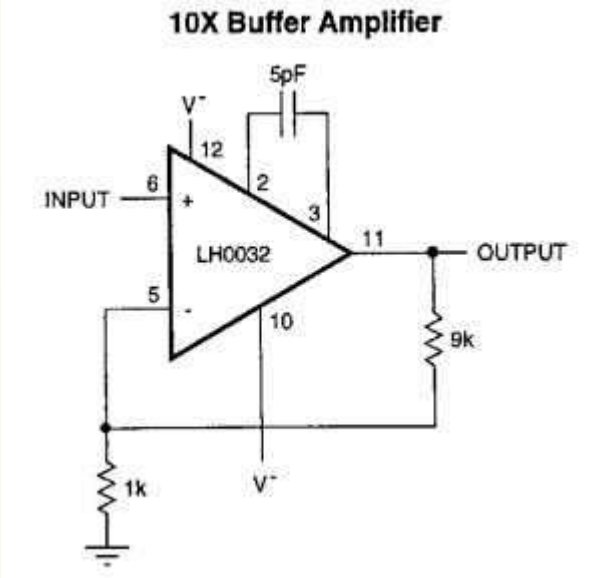

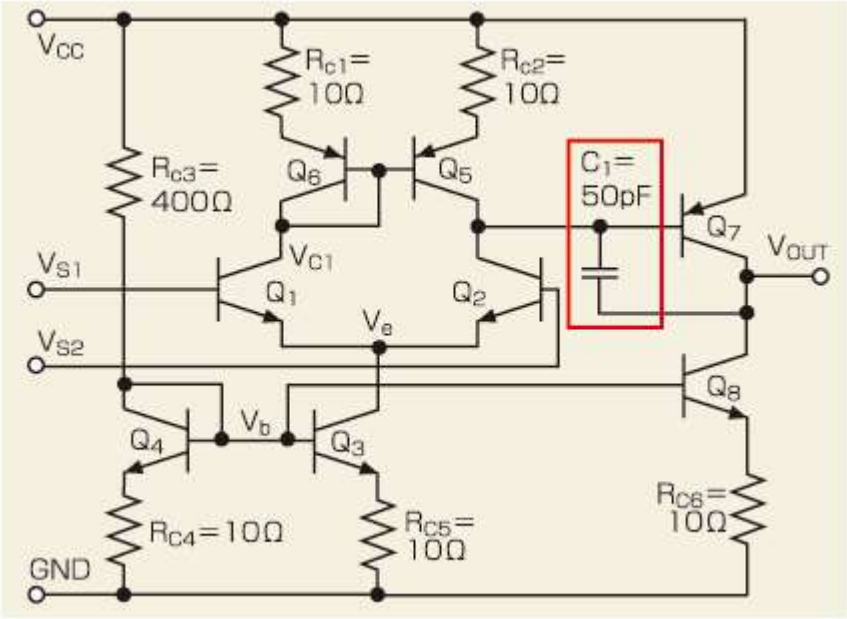

Oscillator with an op-amp

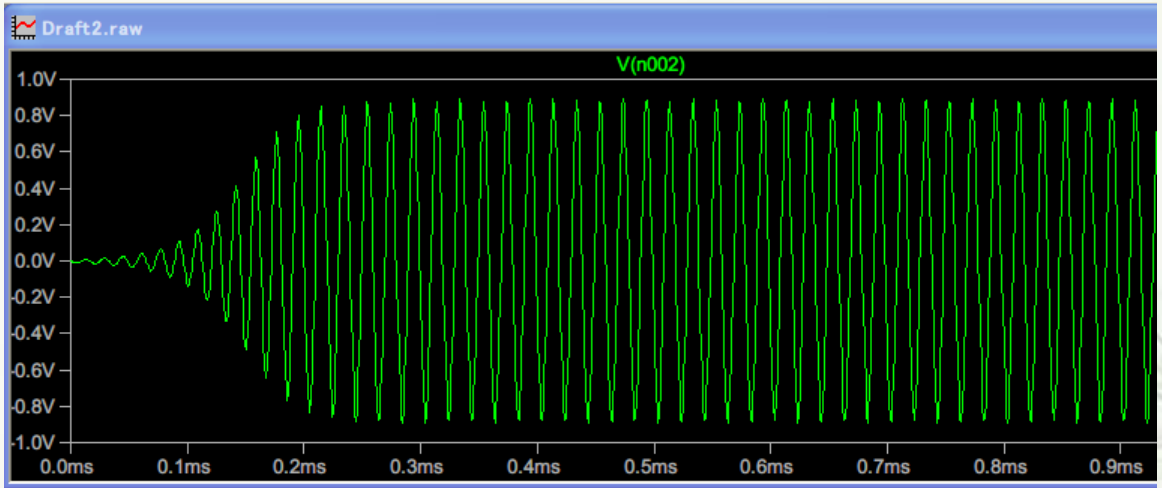

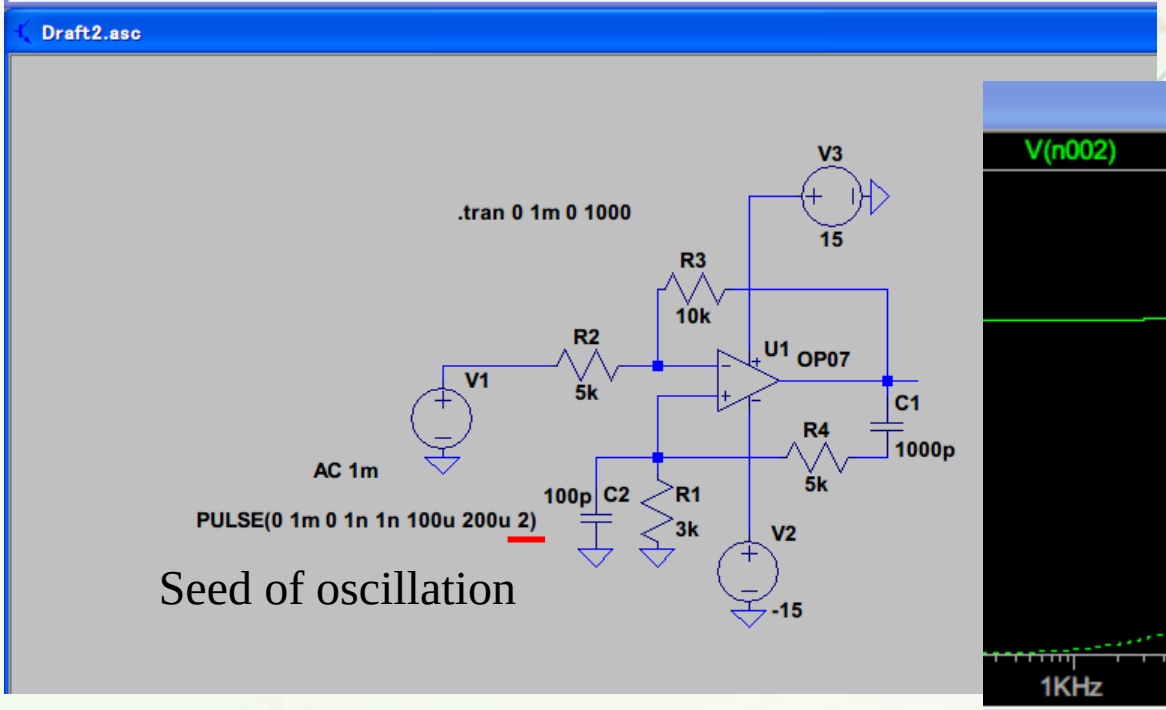

gain

phase

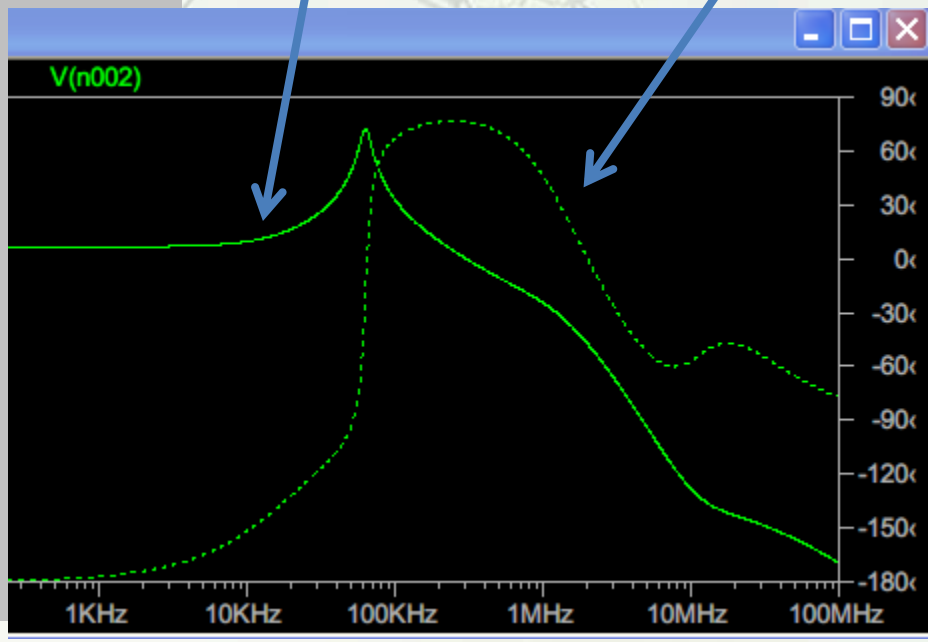

4.3 Example of active element: Transistors

Three types of semiconductors

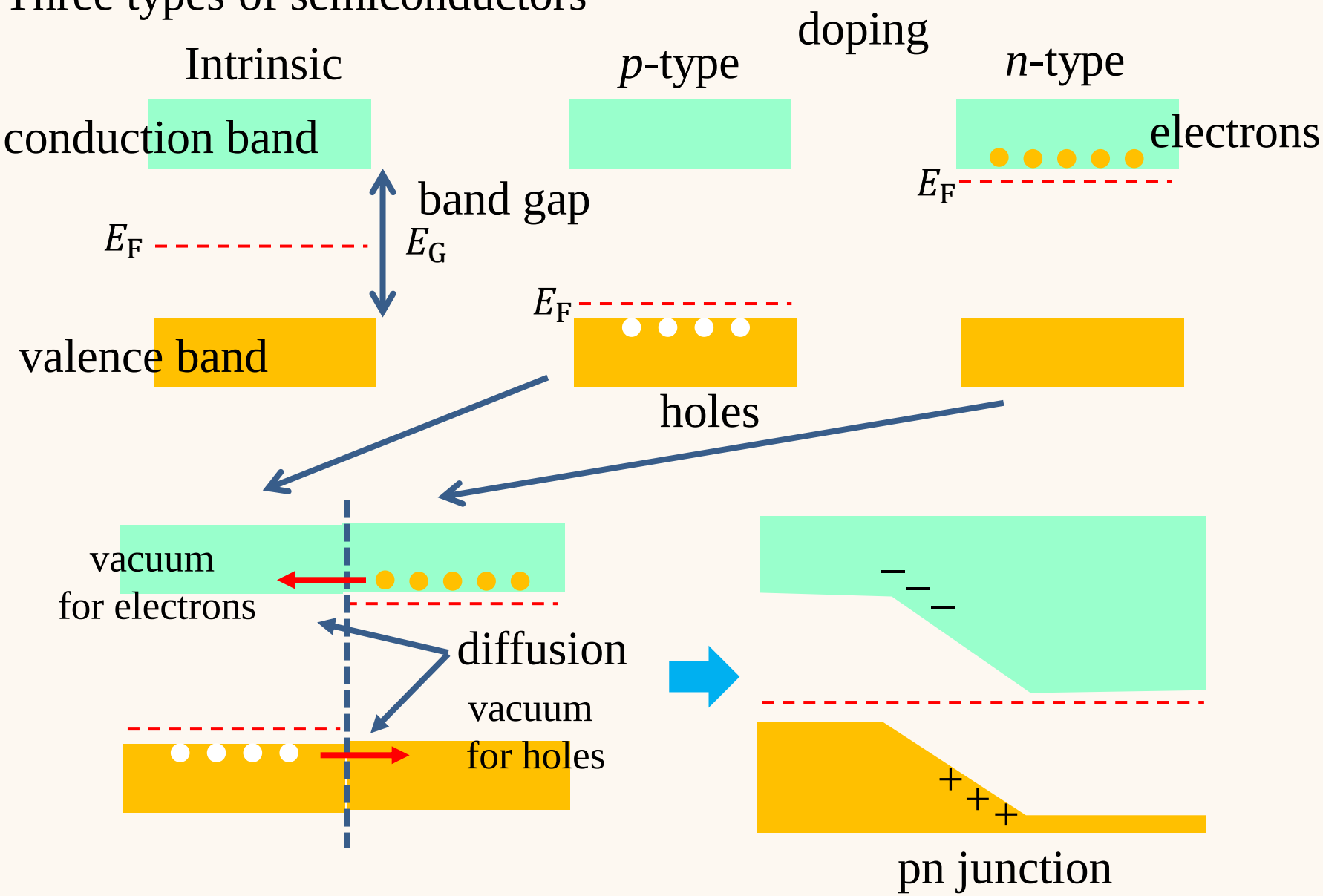

pn junction thermodynamics

Consider electrons

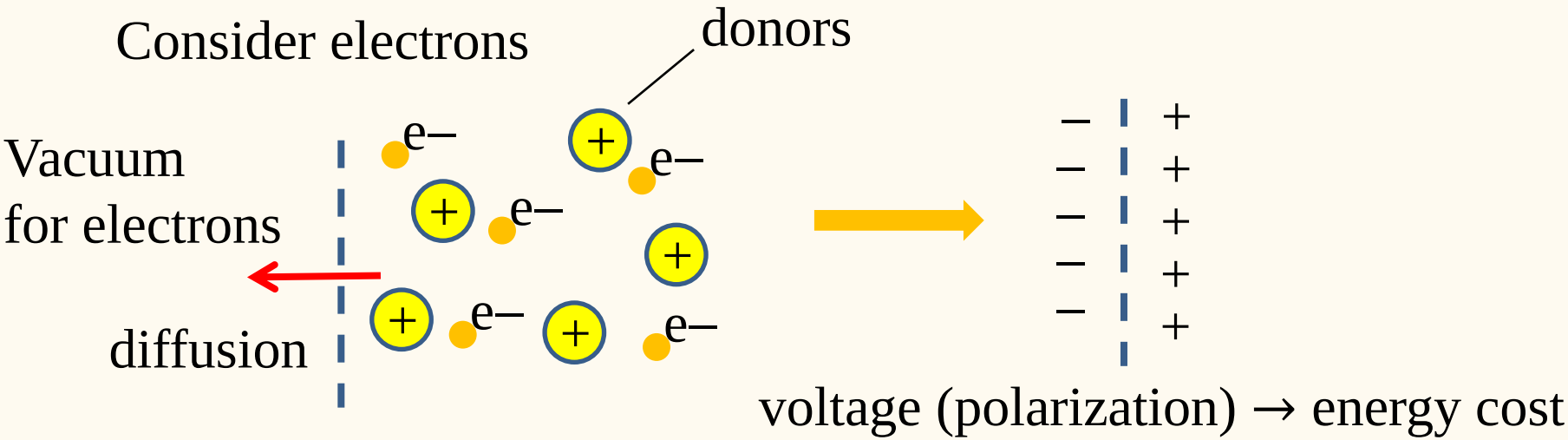

$$F = U - TS$$

Voltage (internal energy cost)

Diffusion (entropy)

Minimization of F → Built-in (diffusion) voltage V_{bi}

4.3.1 I-V characteristics of pn junctions

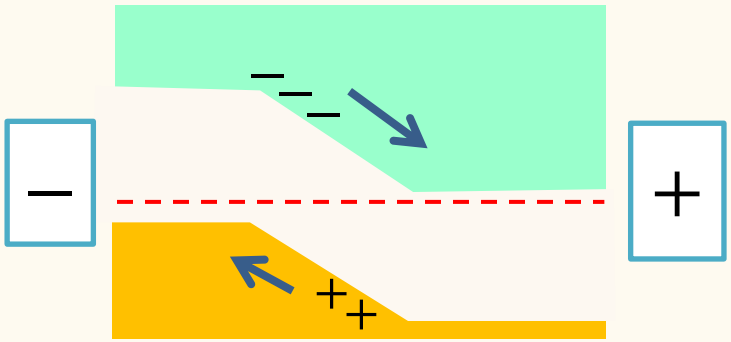

Reverse bias

enhances V_{bi} : no go

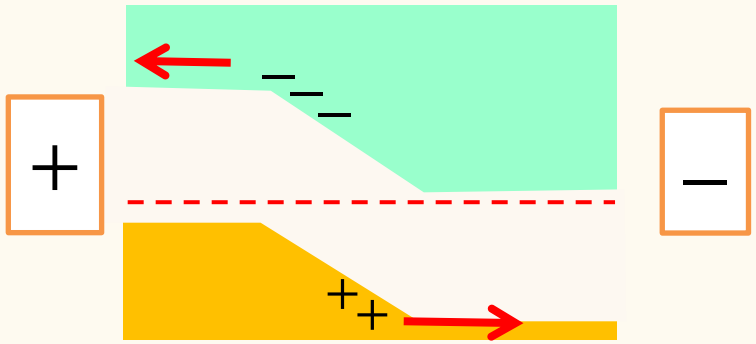

Forward bias

overcomes V_{bi} : go

Minority carrier injection

Rectification

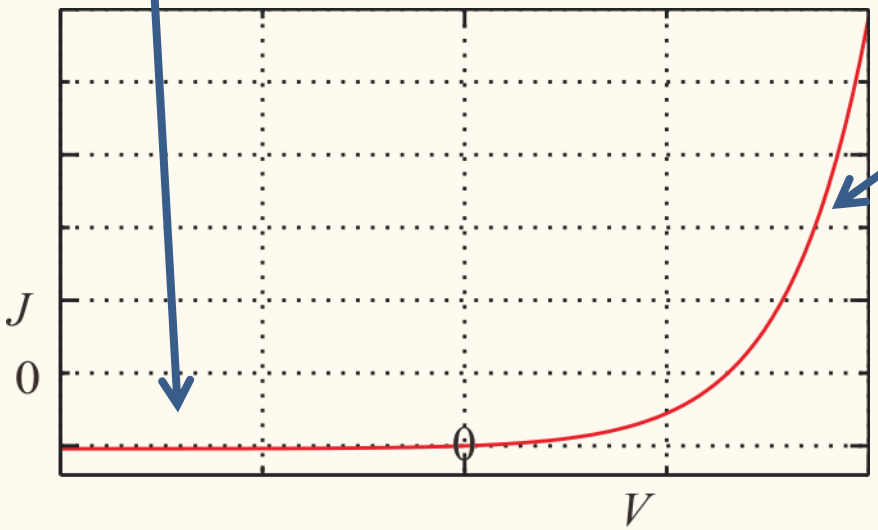

$$J = J_0 \left[\exp\left(\frac{eV}{k_B T} \right) - 1 \right]$$

Shockley theory

Solar cell (injection of minority carriers)

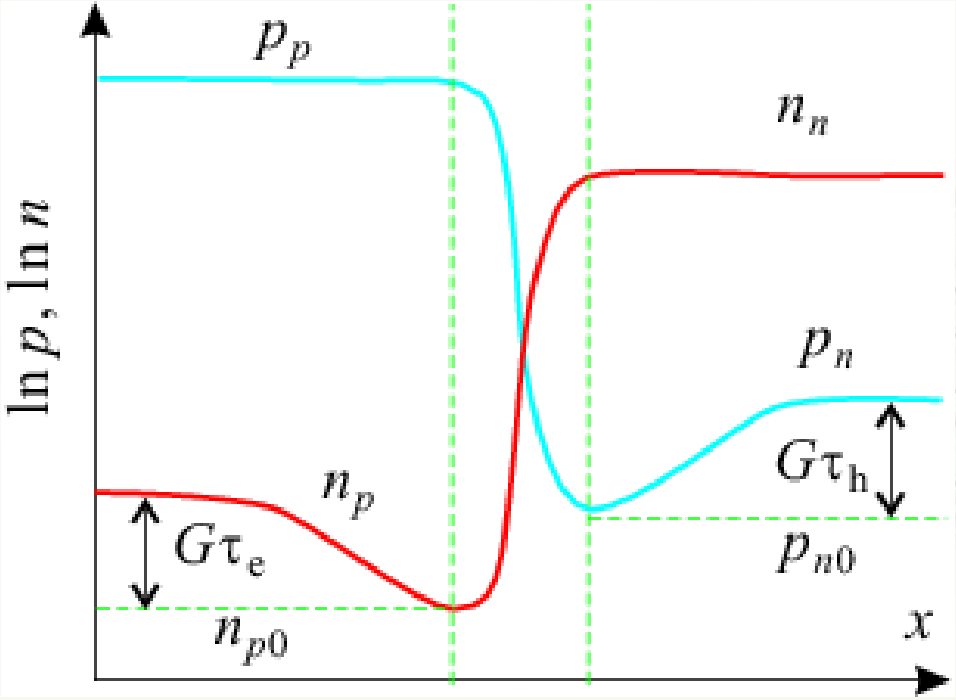

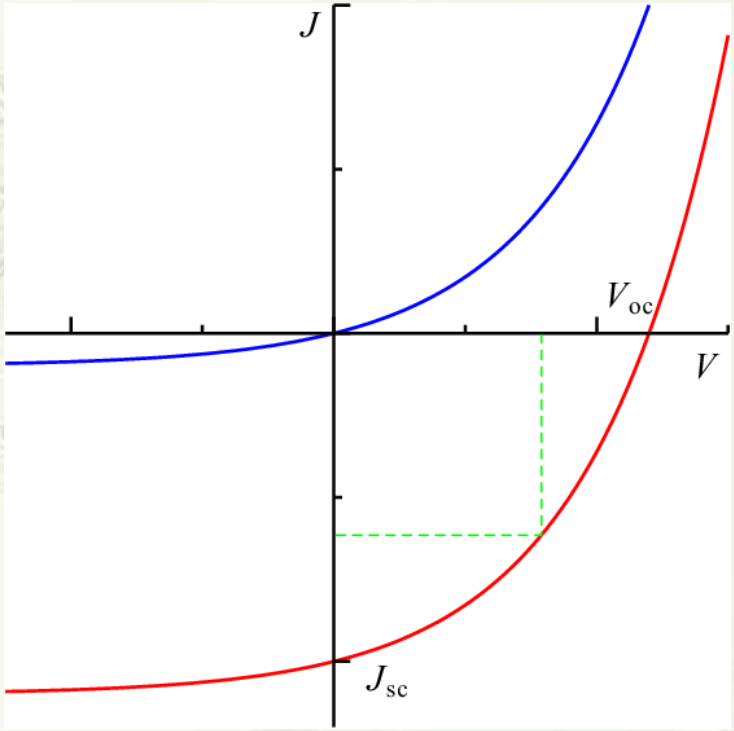

4.3.2 Discovery and invention of bi-polar transistors

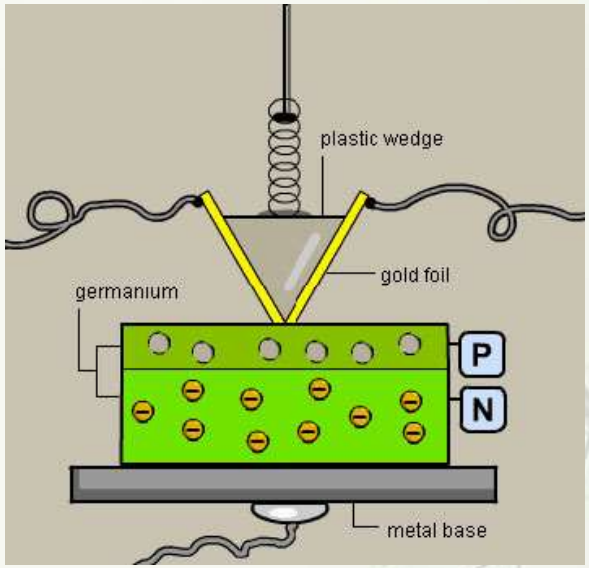

The first
point contact transistor

(Dec. 1947
The paper published
in June 1948.)

John Bardeen

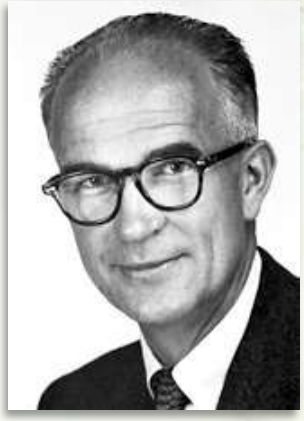

William Shockley

Walter Brattain

AT&T Bell Laboratories

Static characteristics

Bipolar transistor structures and symbols

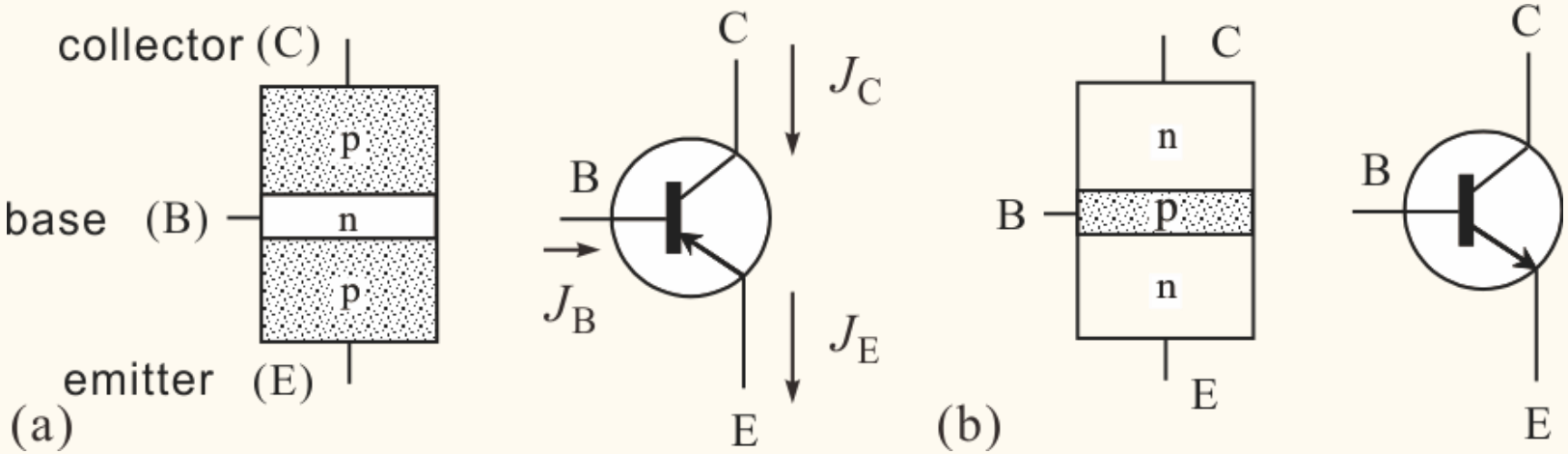

Why it can amplify?

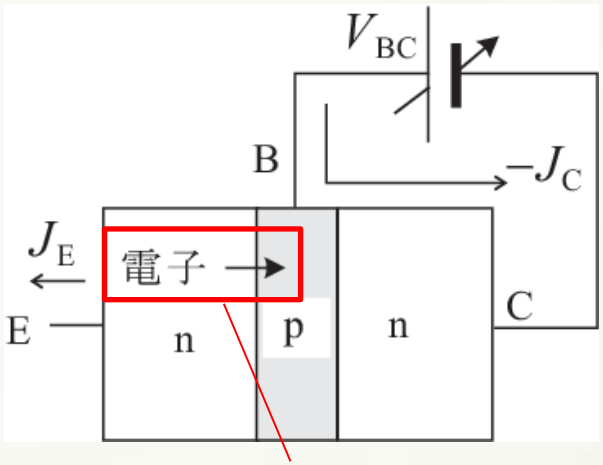

Injection of minority carriers

cf. Solar cell: optical injection of minority carriers

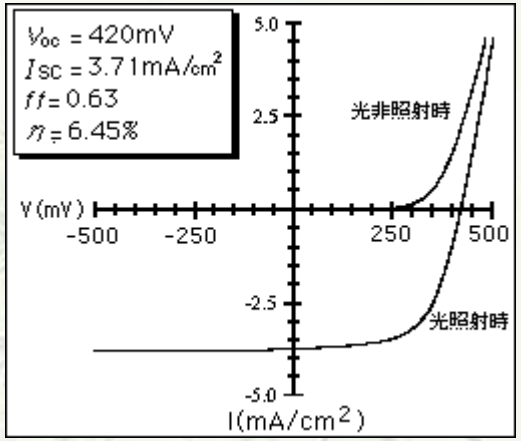

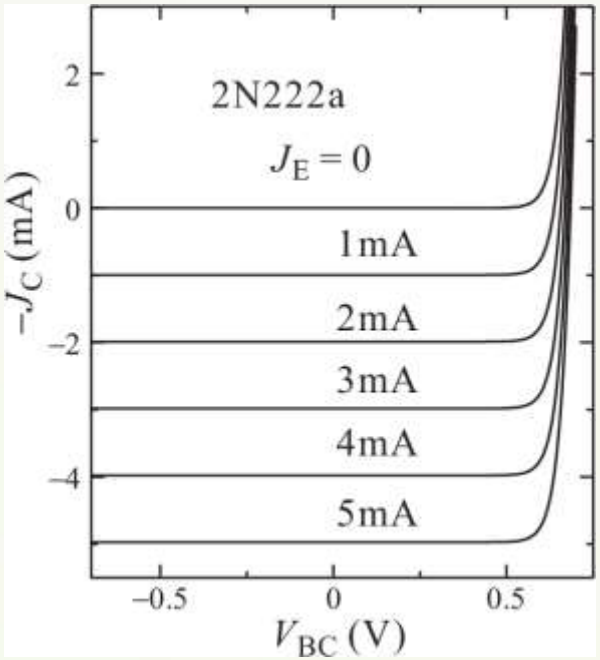

Diffusive conduction

Mostly absorbed into the collector

Why it can amplify?

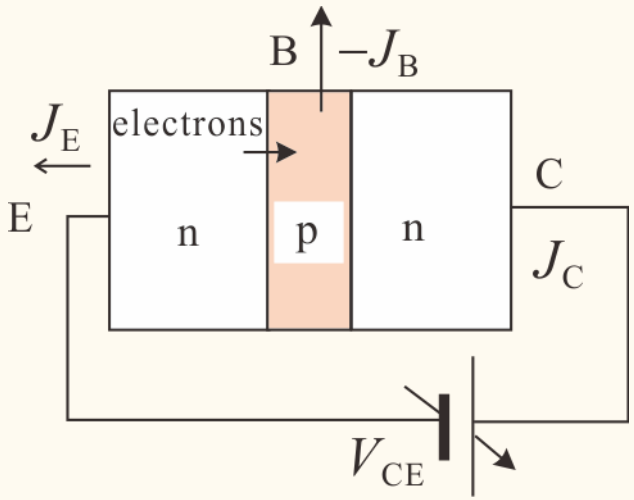

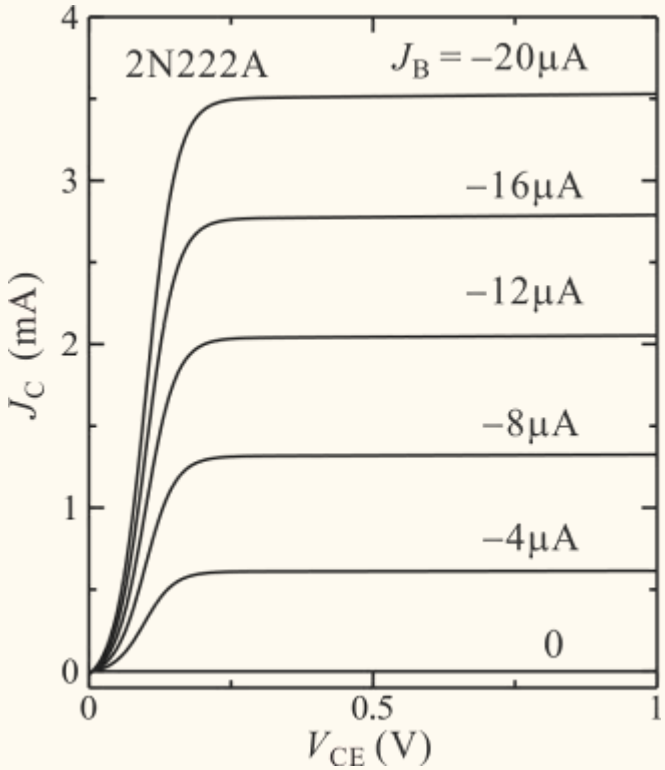

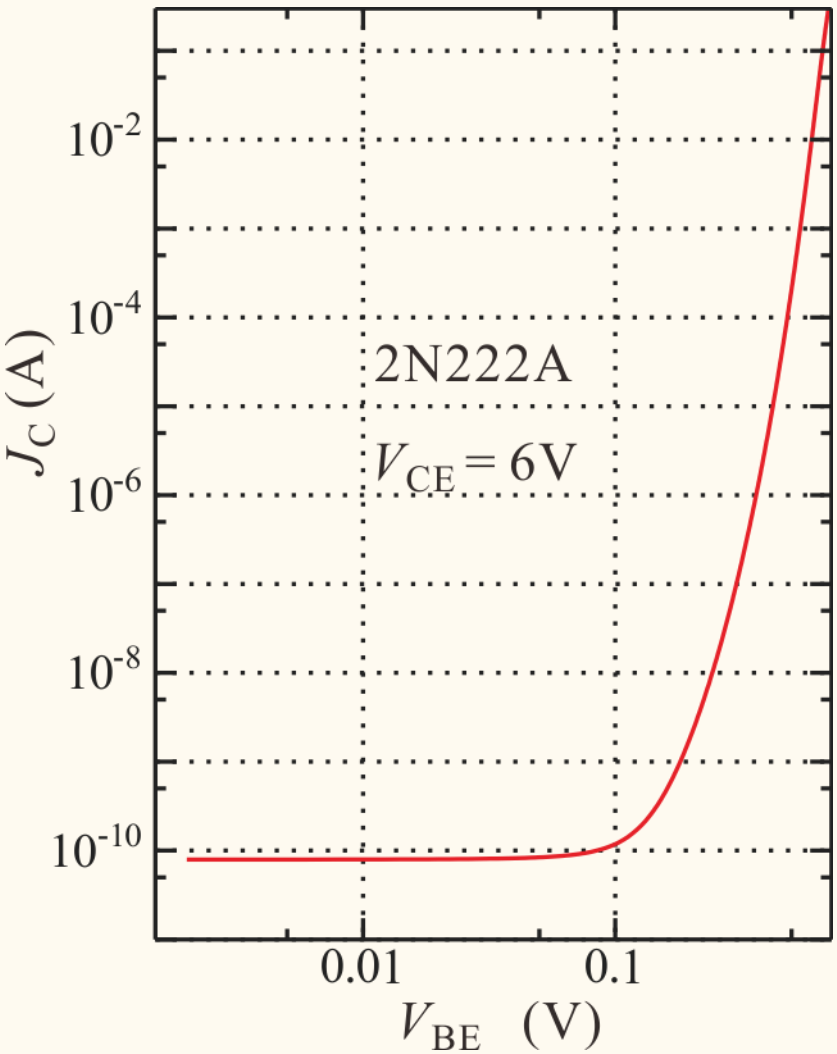

Current amplification : Linearize with quantity selection

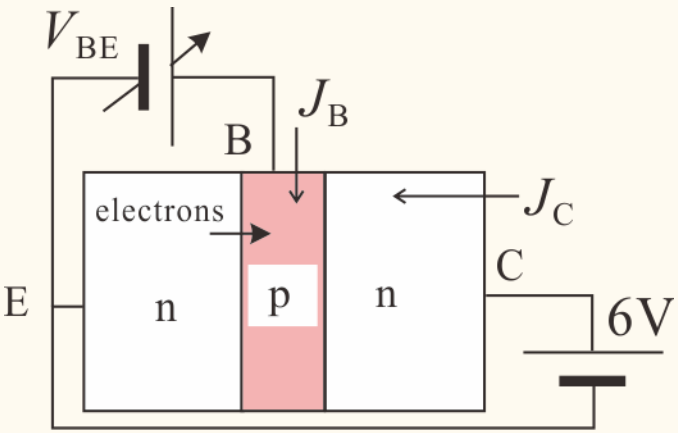

$$J_C = h_{FE} J_B$$

Emitter-common current gain

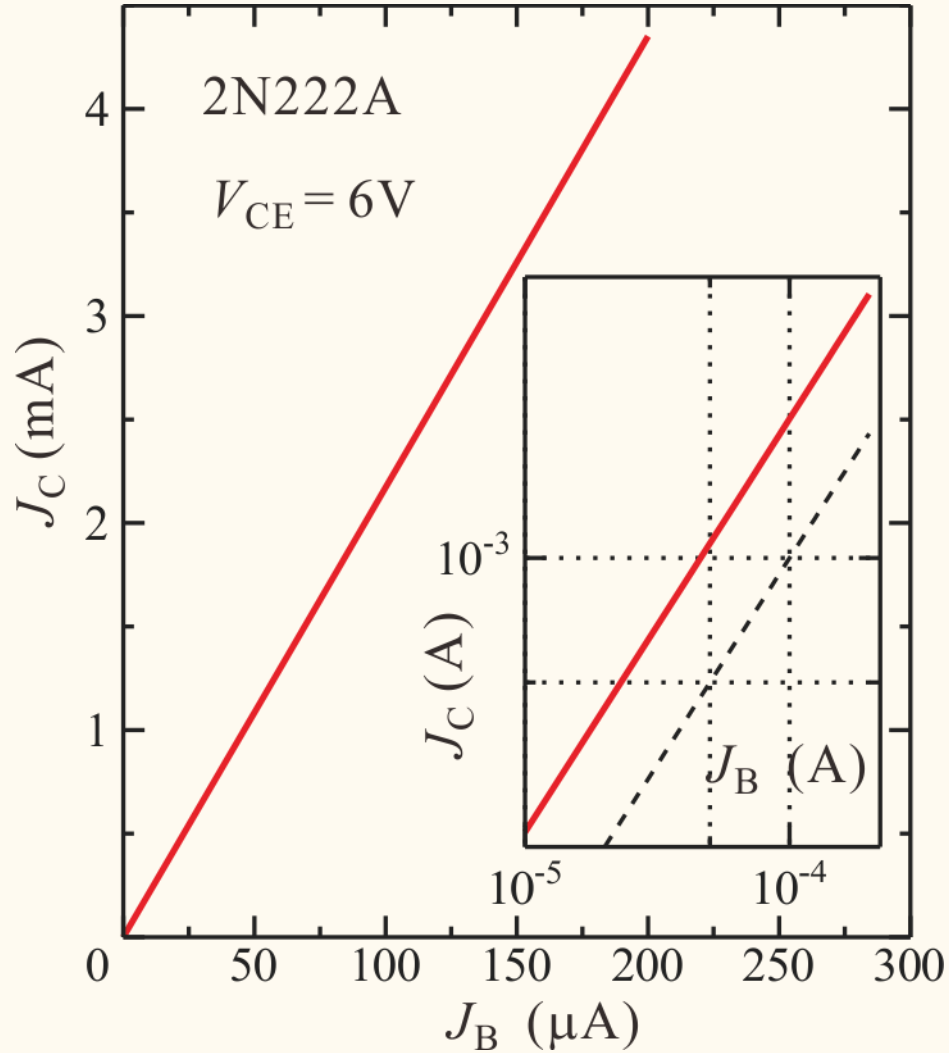

Linear approximation of bipolar transistor

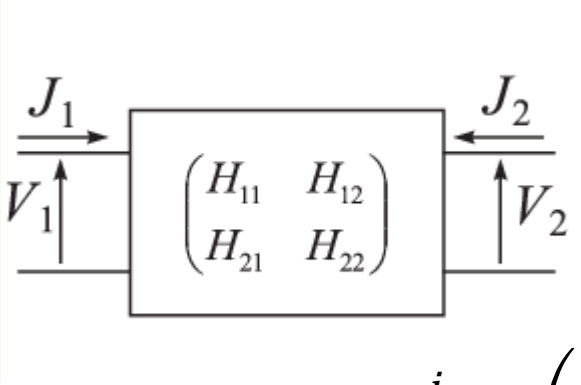

Hybrid matrix

$$\begin{pmatrix} V_1 \\ J_2 \end{pmatrix} = \begin{pmatrix} H_{11} & H_{12} \\ H_{21} & H_{22} \end{pmatrix} \begin{pmatrix} J_1 \\ V_2 \end{pmatrix}.$$

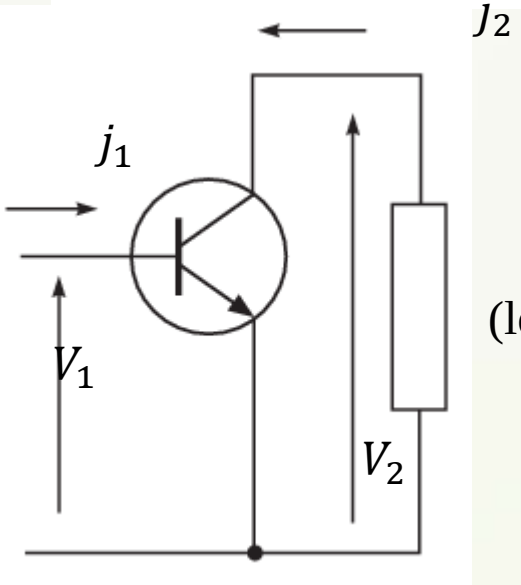

$$\begin{pmatrix} v_1 \\ j_2 \end{pmatrix} = \begin{pmatrix} h_{11} & h_{12} \\ h_{21} & h_{22} \end{pmatrix} \begin{pmatrix} j_1 \\ v_2 \end{pmatrix} = \begin{pmatrix} h_i & h_r \\ h_f & h_o \end{pmatrix} \begin{pmatrix} j_1 \\ v_2 \end{pmatrix}$$

h-parameters

(lower case:
local linear approximation)

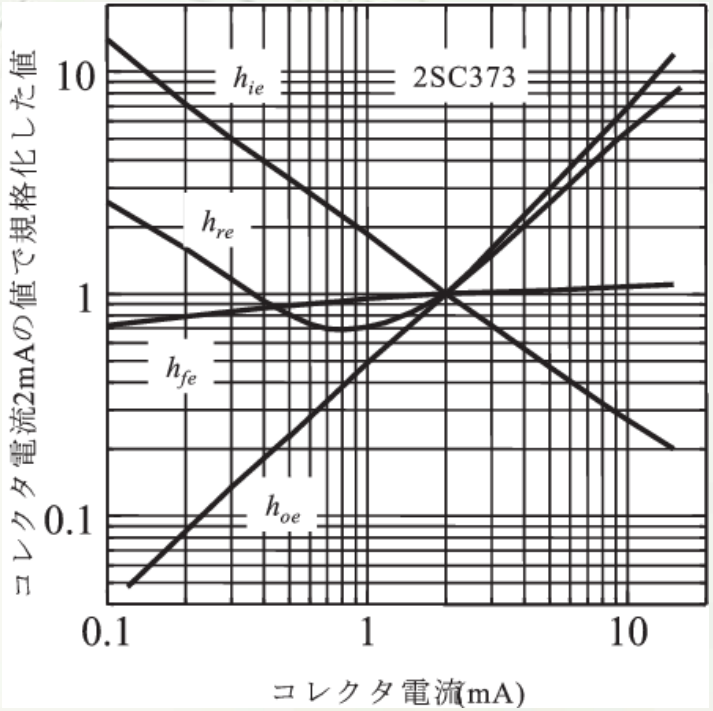

Bias circuit for transistor

Common emitter amplifier

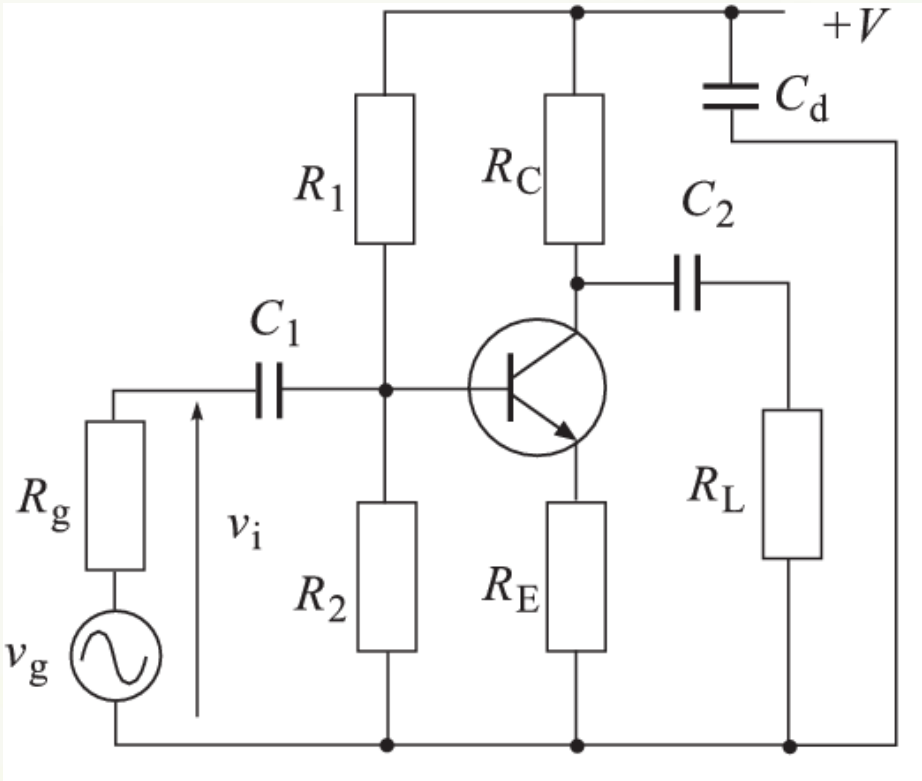

For bias (dc) circuits

All the capacitors can be viewed as break line.

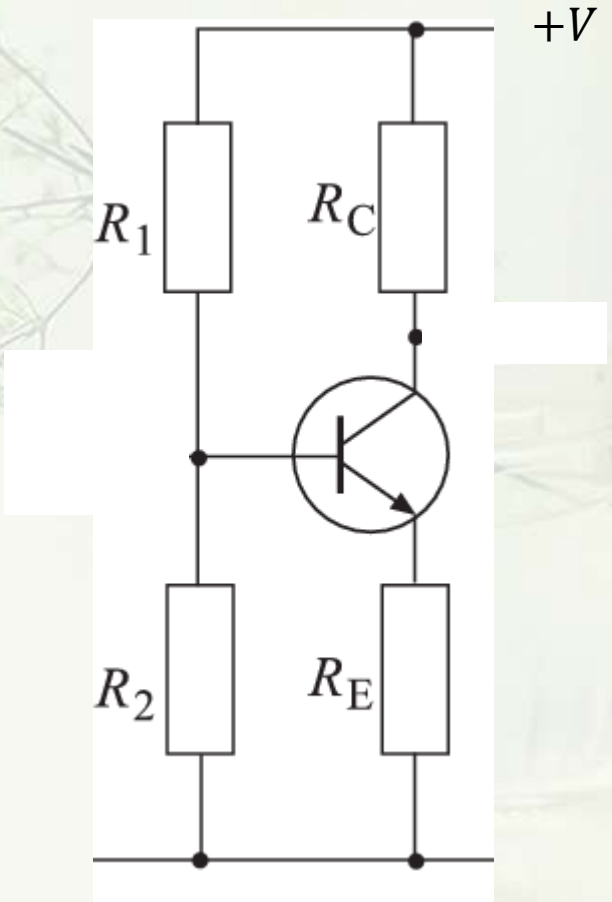

Small amplitude linear circuit for transistor

For small amplitude (high-frequency) circuits

All the capacitors can be viewed as short circuits.

Common emitter amplifier

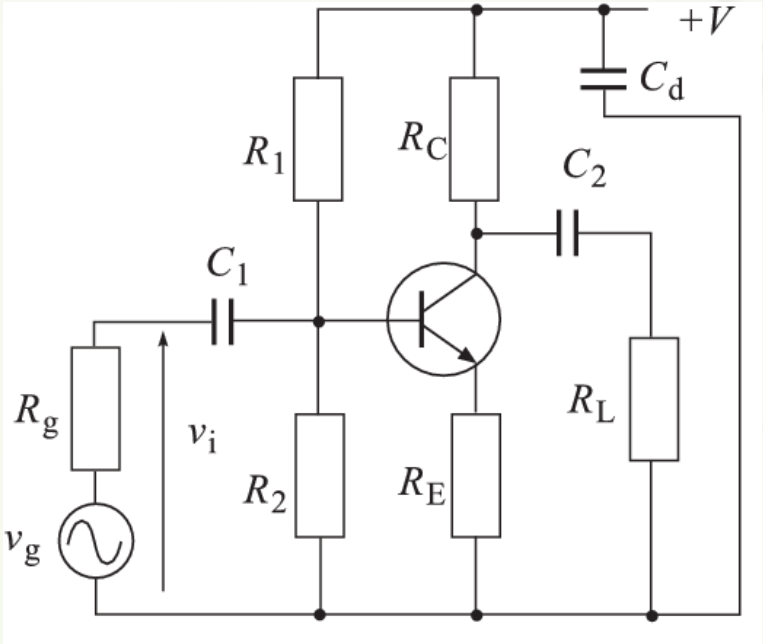

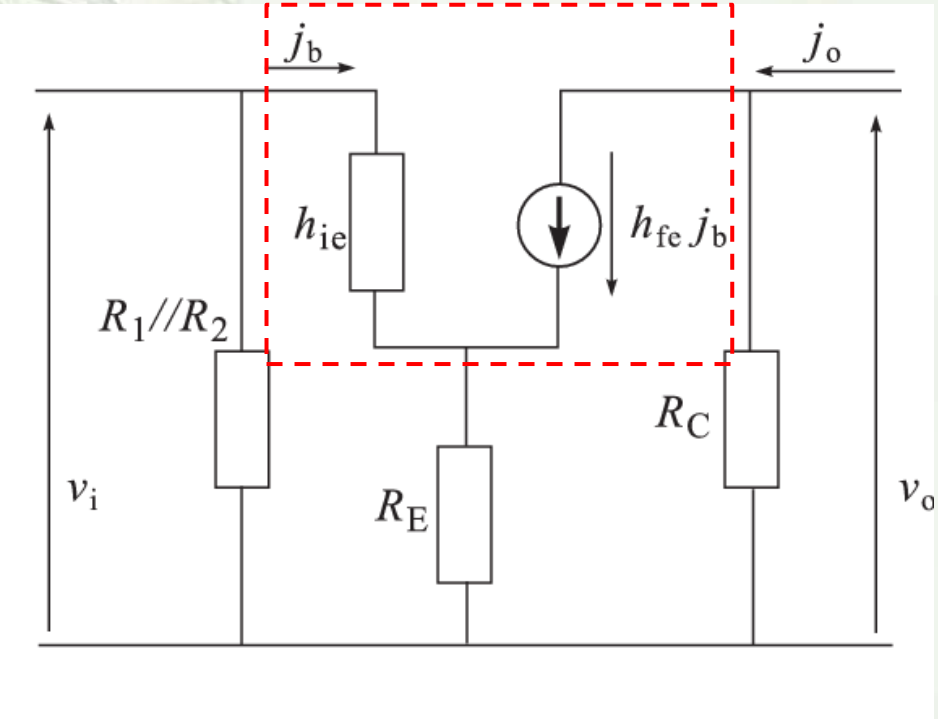

Small amplitude linear circuit for transistor

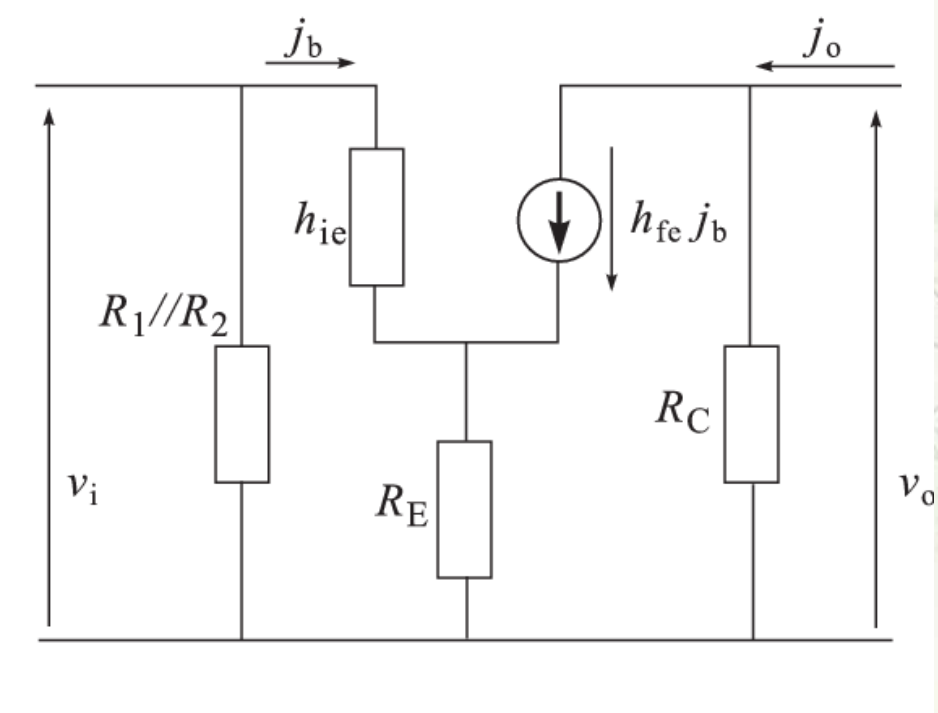

Kirchhoff

$$v_i = h_{ie} j_b + R_E(j_b + h_{fe} j_b)$$

$$v_o = h_{fe} j_b R_C$$

$$A = \frac{v_o}{v_i} = \frac{h_{fe} R_C}{h_{ie} + R_E(1 + h_{fe})}$$

$$\approx \frac{R_C}{R_E} \quad h_{fe} \gg 1$$

Negative feedback

Common emitter (grounded emitter) amplifier circuit

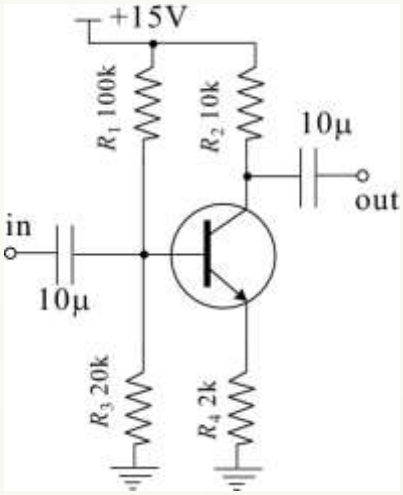

$$\Delta V_C = R_2 \Delta J_C \approx R_2 \Delta J_E = R_2 \frac{\Delta V_E}{R_4} = \frac{R_2}{R_4} \Delta V$$

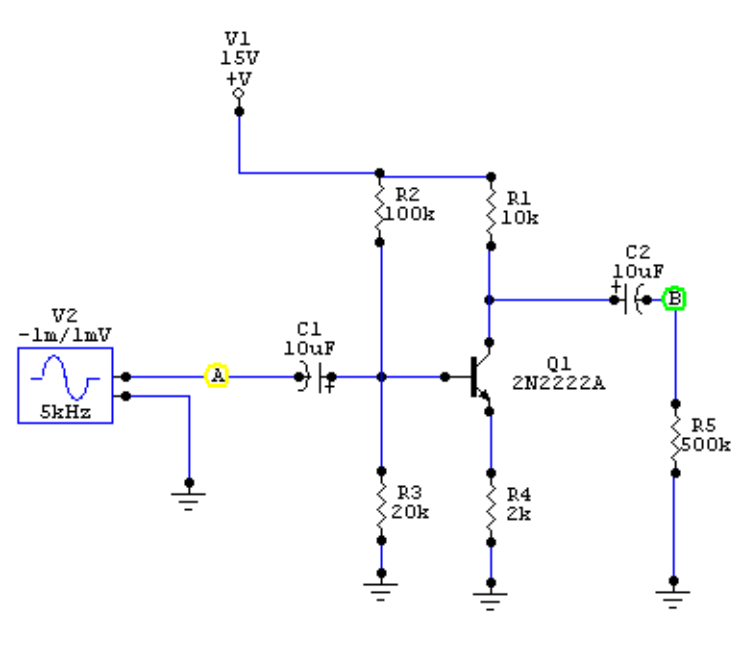

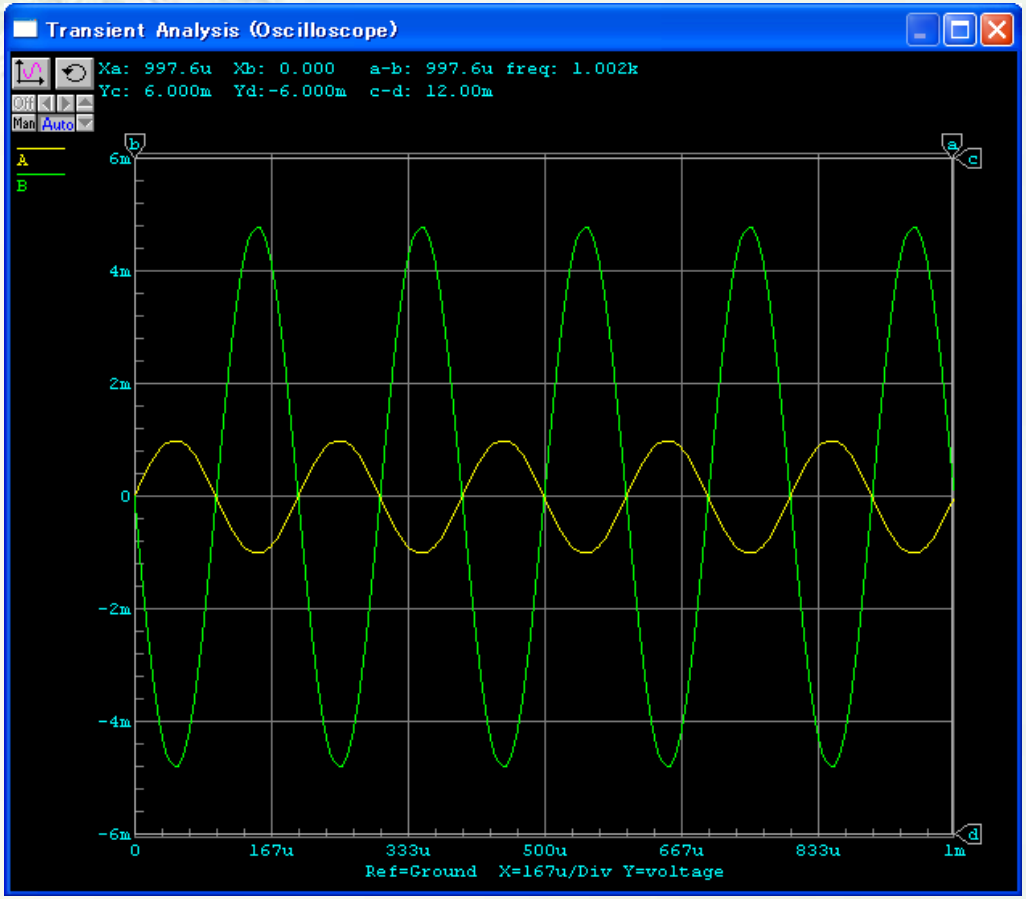

4.4 Field effect transistor (FET)

(field effect transistor, FET)

Junction FET (JFET)

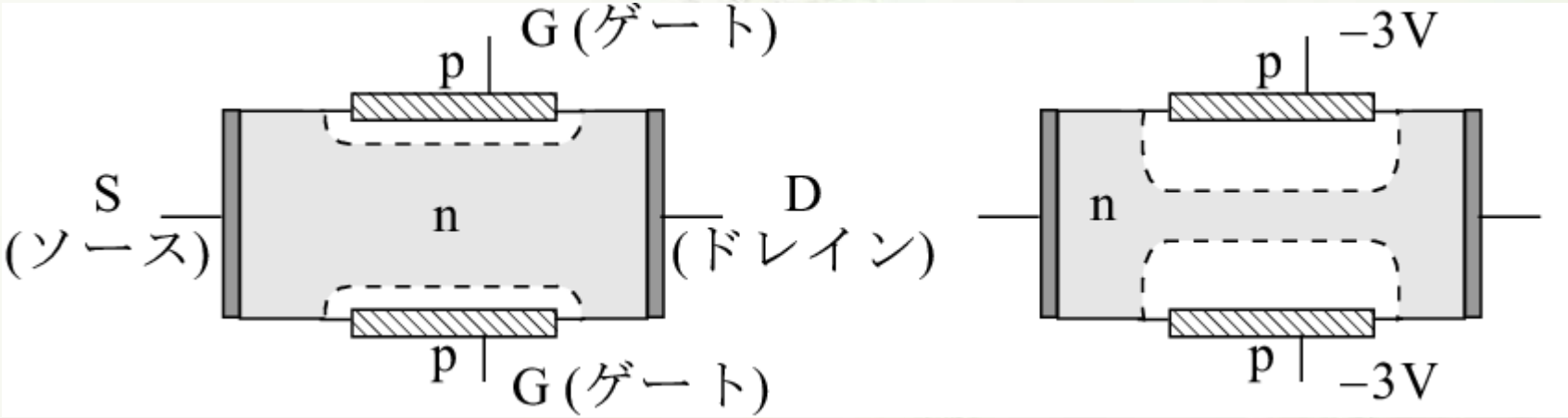

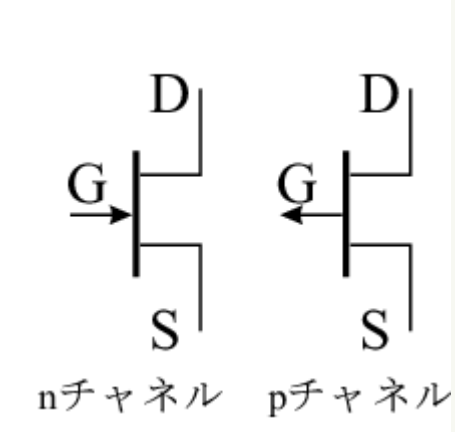

MESFET, MOSFET

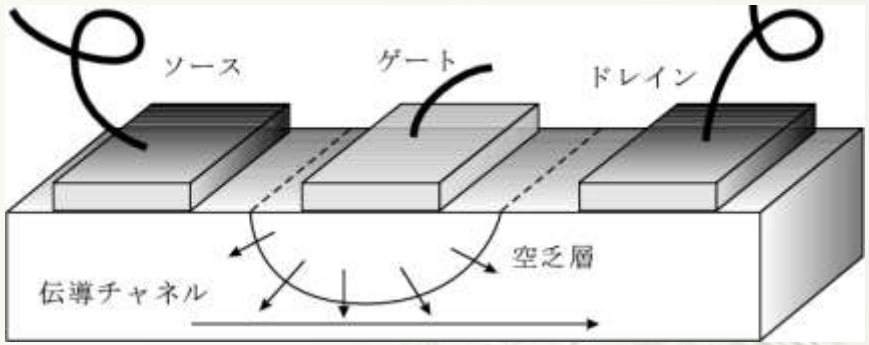

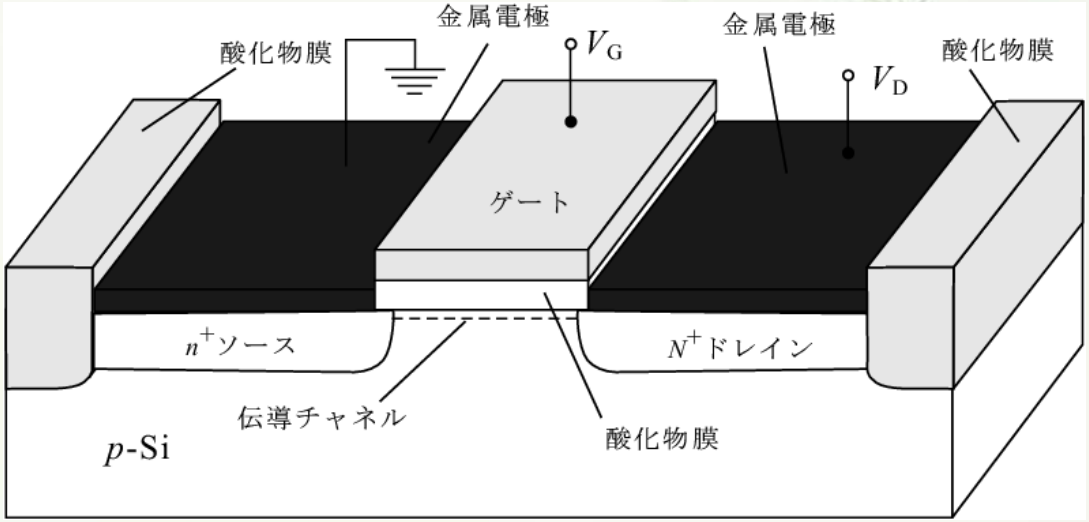

Static characteristics of FET

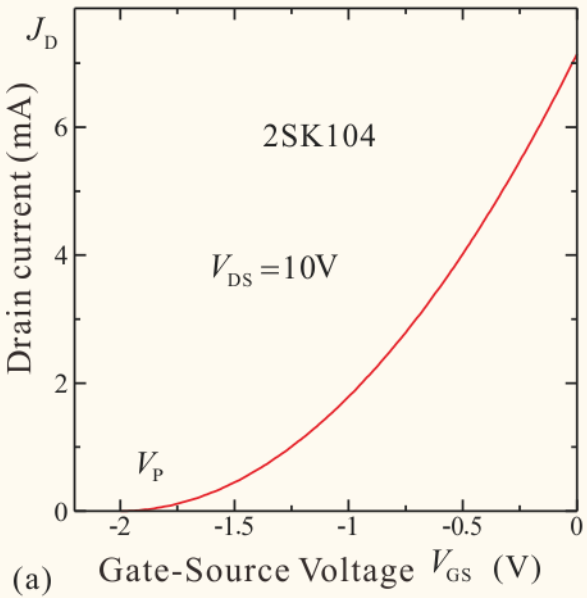

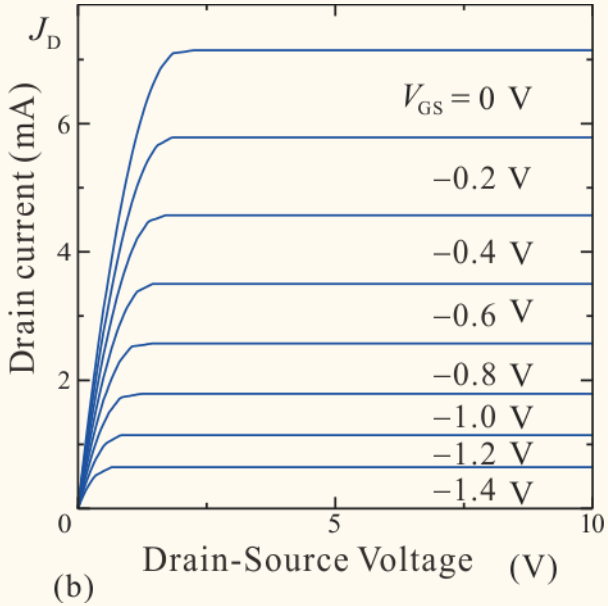

$$J_G \simeq 0,$$

$$J_D = f(V_G, V_D)$$

$$g_m \equiv \left(\frac{\partial J_D}{\partial V_{GS}}\right)_{V_D=\text{const.}},$$ transconductance

$$r_d \equiv \left(\frac{\partial V_D}{\partial J_D}\right)_{V_{GS}=\text{const.}}$$ Drain resistance

Locally linear approximation $$j_d = g_m v_{gs} + \frac{v_d}{r_d}$$

References

岡村迪夫「OPアンプ回路の設計」CQ出版社
松澤昭「基礎電子回路工学」電気学会

A. Agarwal, J. H. Lang “Foundations of Analog and Digital Electronic Circuits” (Elsevier, 2005).

S. M. Sze, K. K. Ng, “Physics of Semiconductor Devices” (Wiley, 2007).